# ECE408/CS483/CSE408 Fall 2024

# Applied Parallel Programming

# Lecture 22: Accelerating Matrix Operations



© S. Patel
2023 ECE408/CS483/ University of Illinois at Urbana-Champaign

# Course Reminders

- PM3 is out and is due soon
  - This is a much more involved PM, start early
  - Do not wait to submit until last minute!
  - Competition description will be out too, but first you need to finish PM3. So, do not yet work on the competition part.
- MT2 is coming, please check course Canvas for details
  - If you have a conflict with the exam time, please email Prof Kindratenko by Monday, December 2nd.
- CUDA perf team @ Nvidia is looking for an intern and new college grad. Please contact Prof. Patel if interested.

# llm.c

- Github: https://github.com/karpathy/llm.c

LLMs in simple, pure C/CUDA with no need for 245MB of PyTorch or 107MB of cPython. Current focus is on pretraining, in particular reproducing the GPT-2 and GPT-3 miniseries, along with a parallel PyTorch reference implementation in train_gpt2.py. You'll recognize this file as a slightly tweaked nanoGPT, an earlier project of mine. Currently, llm.c is a bit faster than PyTorch Nightly (by about 7%). In addition to the bleeding edge mainline code in train_gpt2.cu, we have a simple reference CPU fp32 implementation in ~1,000 lines of clean code in one file train_gpt2.c. I'd like this repo to only maintain C and CUDA code. Ports to other languages or repos are very welcome, but should be done in separate repos, and I am happy to link to them below in the "notable forks" section. Developer coordination happens in the Discussions and on Discord, either the #llmc channel on the Zero to Hero channel, or on #llmdotc on GPU MODE Discord.

# Llama 3.1 70B

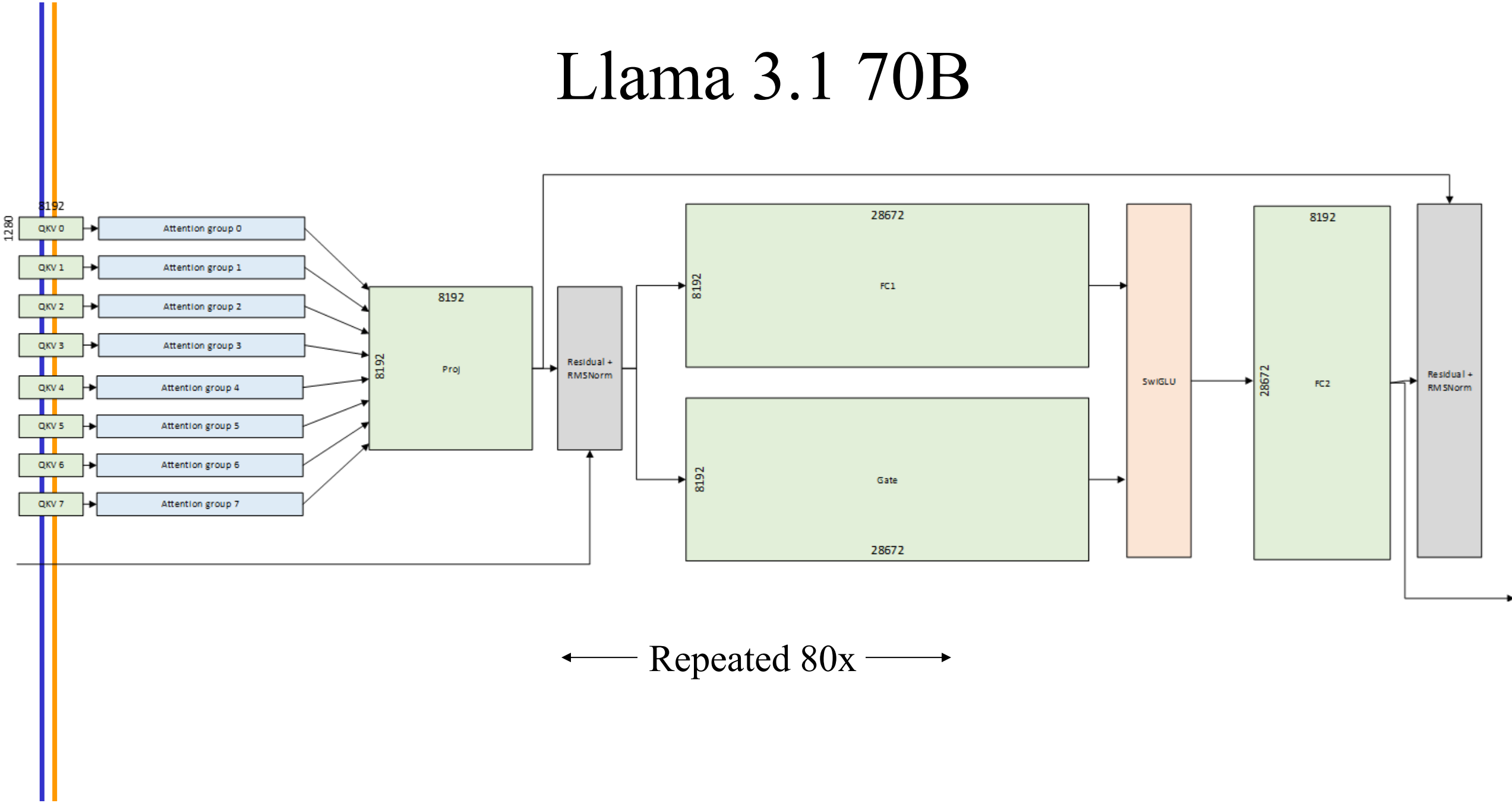


Repeated 80x

# Tiled Matrix Multiplication Kernel

```
__global__ void MatrixMulKernel(float* M, float* N, float* P, int Width)
{
1.  __shared__ float subTileM[TILE_WIDTH][TILE_WIDTH];
2.  __shared__ float subTileN[TILE_WIDTH][TILE_WIDTH];

3.  int bx = blockIdx.x;  int by = blockIdx.y;
4.  int tx = threadIdx.x; int ty = threadIdx.y;

    // Identify the row and column of the P element to work on
5.  int Row = by * TILE_WIDTH + ty;
6.  int Col = bx * TILE_WIDTH + tx;
7.  float Pvalue = 0;

    // Loop over the M and N tiles required to compute the P element
    // The code assumes that the Width is a multiple of TILE_WIDTH!
8.  for (int q = 0; q < Width/TILE_WIDTH; ++q) {
       // Collaborative loading of M and N tiles into shared memory
9.      subTileM[ty][tx] = M[Row*Width + (q*TILE_WIDTH+tx)];
10.     subTileN[ty][tx] = N[(q*TILE_WIDTH+ty)*Width+Col];
11.     __syncthreads();
12.    for (int k = 0; k < TILE_WIDTH; ++k)
13.         Pvalue += subTileM[ty][k] * subTileN[k][tx];
14.     __syncthreads();
15. }
16. P[Row*Width+Col] = Pvalue;
}
```

# At the Operation Level, per Thread

```
for (int k = 0; k < TILE_WIDTH; ++k)
        Pvalue += subTileM[ty][k] * subTileN[k][tx];
```

```
ld rx <-- subTileM[ty][k]        // Load into register rx
ld ry <-- subTileN[k][tx]        // Load into register ry
mad rd <-- rd + rx * ry          // Multiply Add Instruction
```

Each thread is able to complete the dot product in O(TILE_WIDTH) cycles.

# At the Operation Level, per Warp

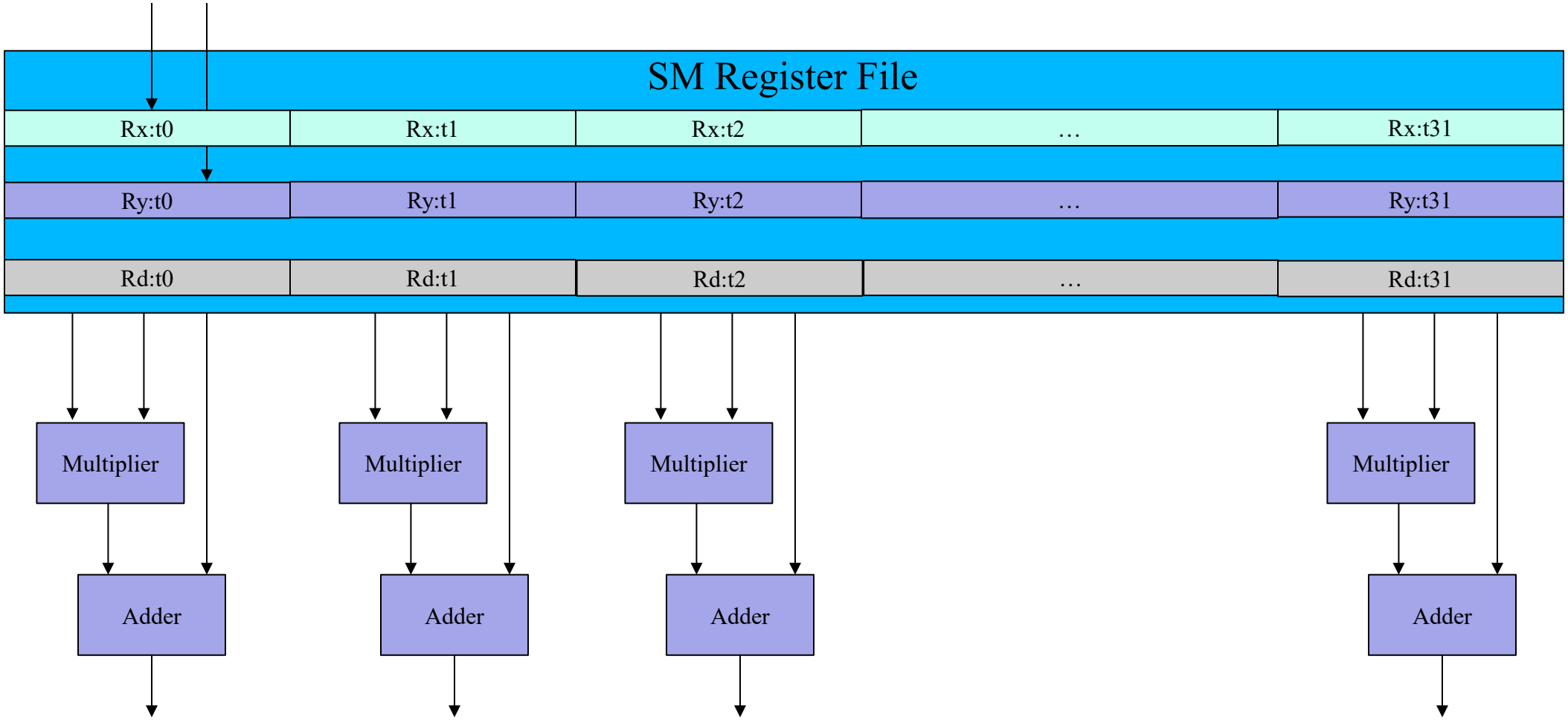


With enough thread blocks, we have a throughput of 2*width of SM FP Ops per cycle

# Let's look at a 4x4 tile example

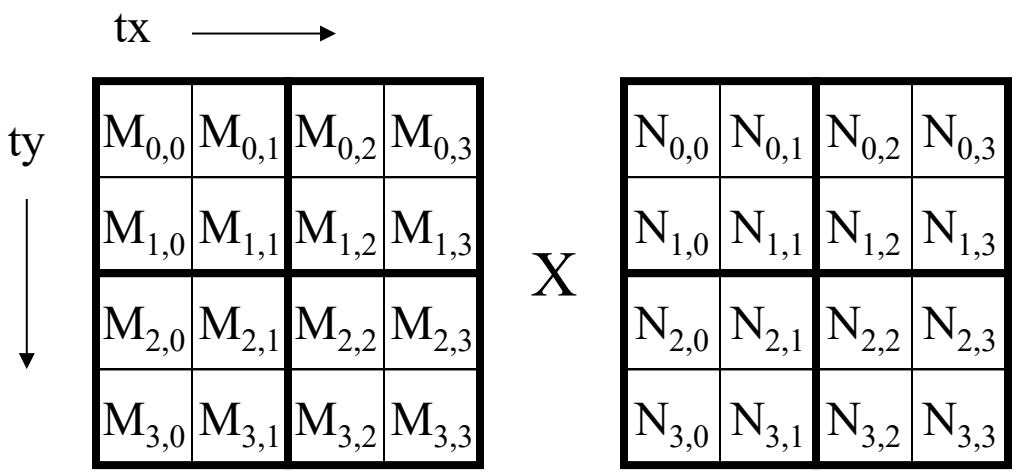


```
for (int k = 0; k < TILE_WIDTH; ++k)
  Pvalue += subTileM[ty][k] * subTileN[k][tx];
```

## Shared Memory Loads into Register File by Loop Iteration

| | t0 | t1 | t2 | t3 | t4 | t5 |
|---|---|---|---|---|---|---|
| k = 0 | $M_{0,0}$, $N_{0,0}$ | $M_{0,0}$, $N_{0,1}$ | $M_{0,0}$, $N_{0,2}$ | $M_{0,0}$, $N_{0,3}$ | $M_{1,0}$, $N_{0,0}$ | $M_{1,0}$, $N_{0,1}$ |
| k = 1 | $M_{0,1}$, $N_{1,0}$ | $M_{0,1}$, $N_{1,1}$ | $M_{0,1}$, $N_{1,2}$ | $M_{0,1}$, $N_{1,3}$ | $M_{1,1}$, $N_{1,0}$ | $M_{1,1}$, $N_{1,1}$ |
| k = 2 | $M_{0,2}$, $N_{2,0}$ | $M_{0,2}$, $N_{2,1}$ | $M_{0,2}$, $N_{2,2}$ | $M_{0,2}$, $N_{2,3}$ | $M_{1,2}$, $N_{2,0}$ | $M_{1,2}$, $N_{2,1}$ |

# More Efficient Pattern

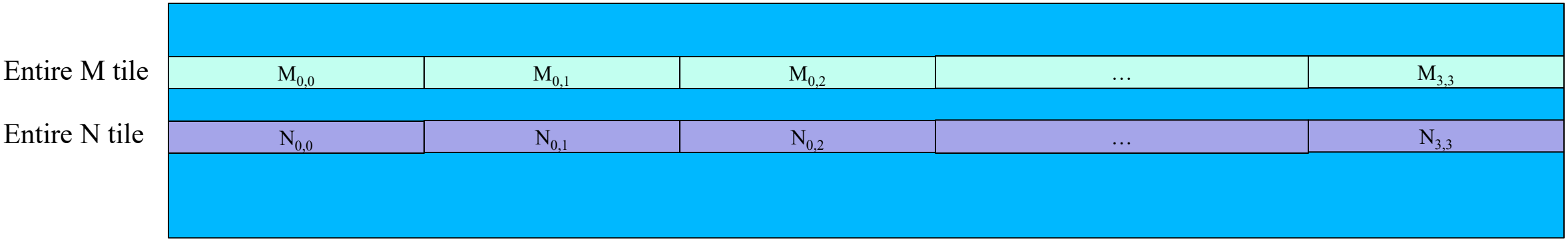


With two loads from shared memory across a warp (only 16 threads needed), we can load the entire 4x4 subtiles of M and N

# Optimized Hardware

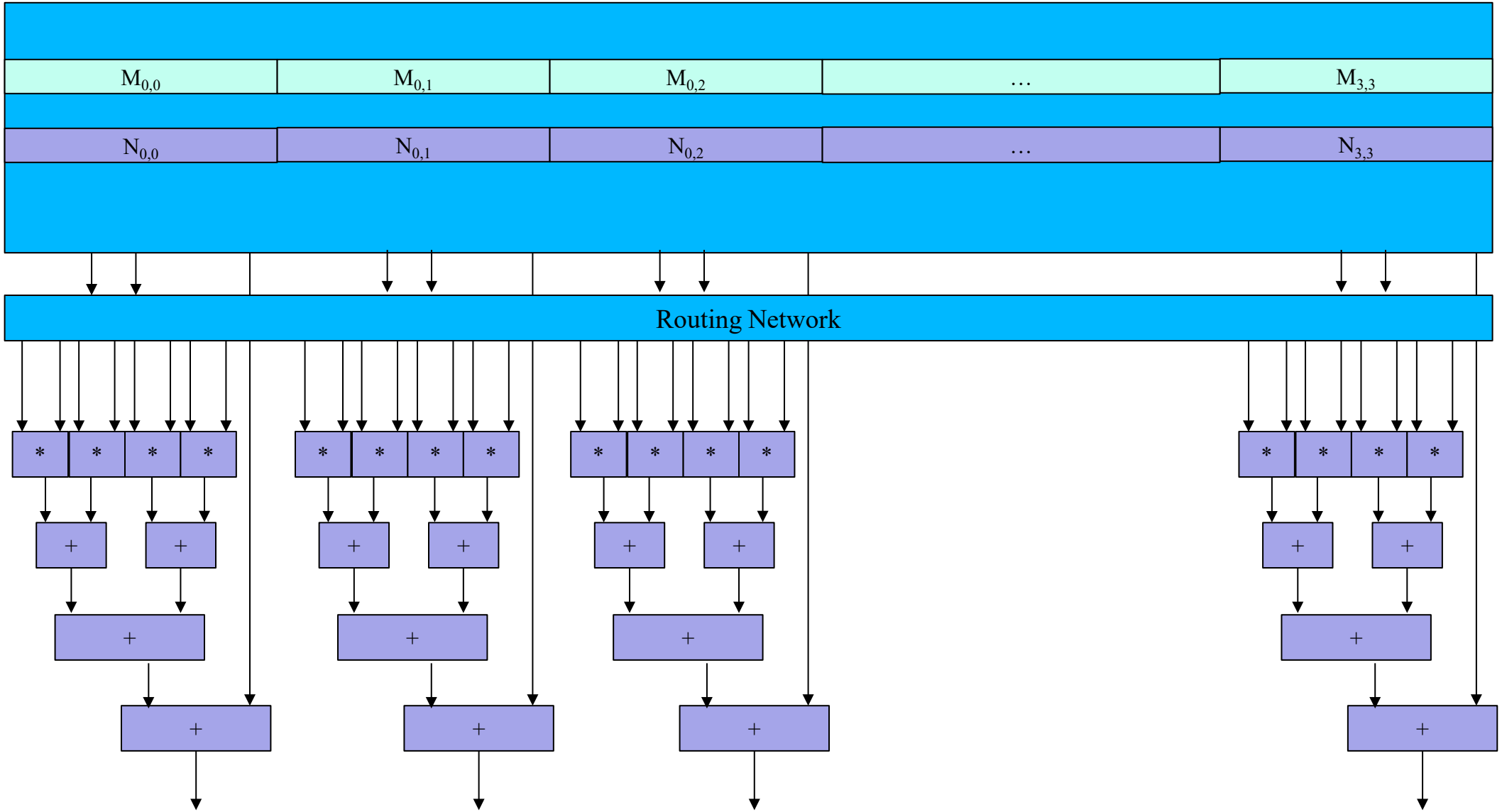

# Notes on Optimized HW

- If we optimize for 16-bit types (and smaller)
  - We need 16b * 32 threads = 512 bits per register
  - 4 16-bit multipliers per lane, but 32-bit adders
- Max Throughput is now increased by 4x

# Nvidia Tensor Cores

$$D = \begin{pmatrix} A_{0,0} & A_{0,1} & A_{0,2} & A_{0,3} \\ A_{1,0} & A_{1,1} & A_{1,2} & A_{1,3} \\ A_{2,0} & A_{2,1} & A_{2,2} & A_{2,3} \\ A_{3,0} & A_{3,1} & A_{3,2} & A_{3,3} \end{pmatrix} \begin{pmatrix} B_{0,0} & B_{0,1} & B_{0,2} & B_{0,3} \\ B_{1,0} & B_{1,1} & B_{1,2} & B_{1,3} \\ B_{2,0} & B_{2,1} & B_{2,2} & B_{2,3} \\ B_{3,0} & B_{3,1} & B_{3,2} & B_{3,3} \end{pmatrix} + \begin{pmatrix} C_{0,0} & C_{0,1} & C_{0,2} & C_{0,3} \\ C_{1,0} & C_{1,1} & C_{1,2} & C_{1,3} \\ C_{2,0} & C_{2,1} & C_{2,2} & C_{2,3} \\ C_{3,0} & C_{3,1} & C_{3,2} & C_{3,3} \end{pmatrix}$$

FP16 or FP32 FP16 FP16 FP16 or FP32

Basic Tensor Operator: Matrix Multiply + Accumulate

# CUDA TENSOR CORE PROGRAMMING

## WMMA Matrix Multiply and Accumulate Operation

Warp-level operation to perform matrix multiply and accumulate

```
wmma::mma_sync(Dmat, Amat, Bmat, Cmat);
```

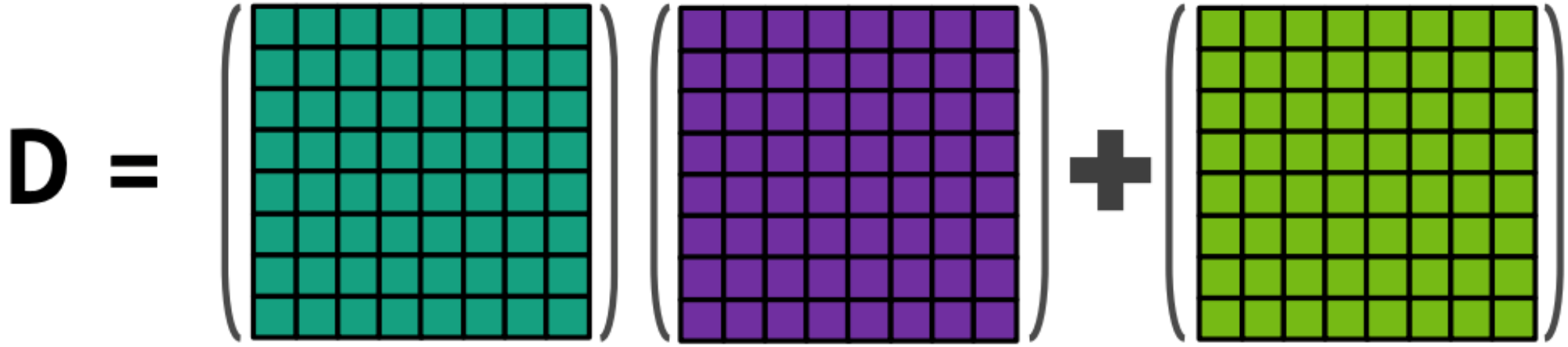

# TENSOR SYNCHRONIZATION

## Full Warp 16x16 Matrix Math

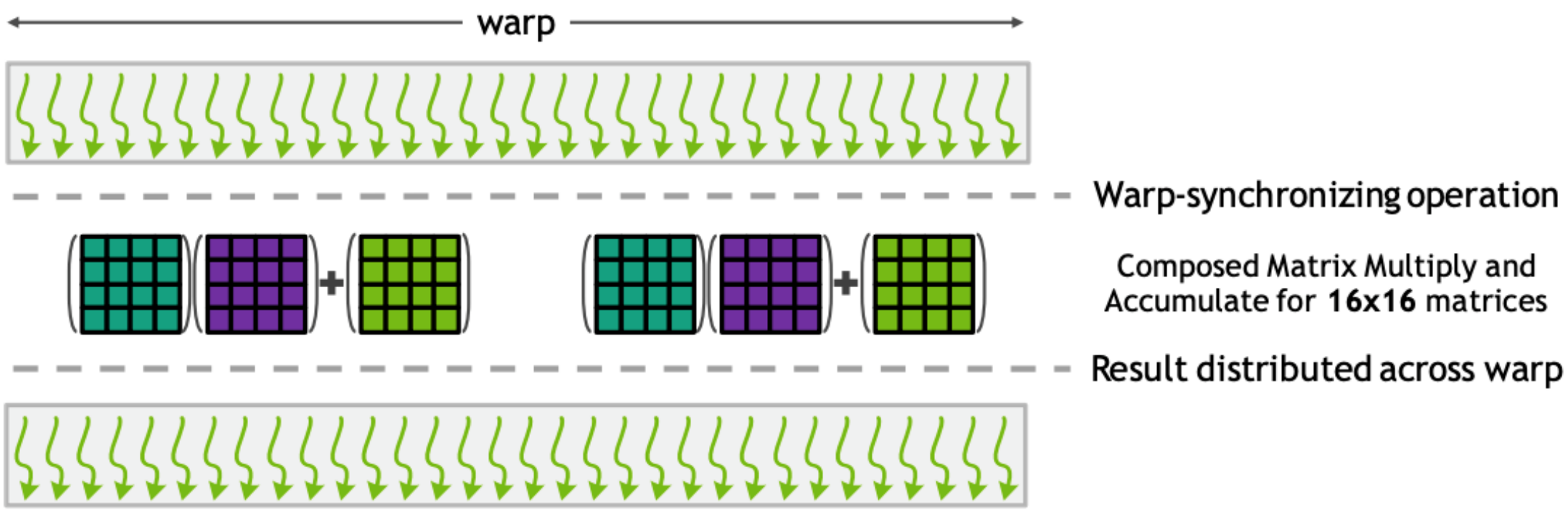

# CUDA TENSOR CORE PROGRAMMING

## WMMA datatypes

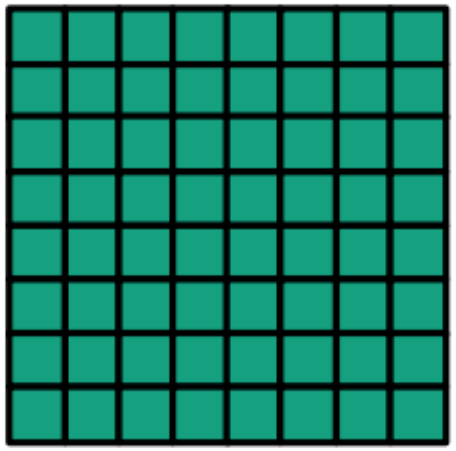

Per-Thread fragments to hold components of matrices for use with Tensor Cores

```
wmma::fragment<matrix_a, …> Amat;
```

# CUDA TENSOR CORE PROGRAMMING

## WMMA load and store operations

Warp-level operation to fetch components of matrices into fragments

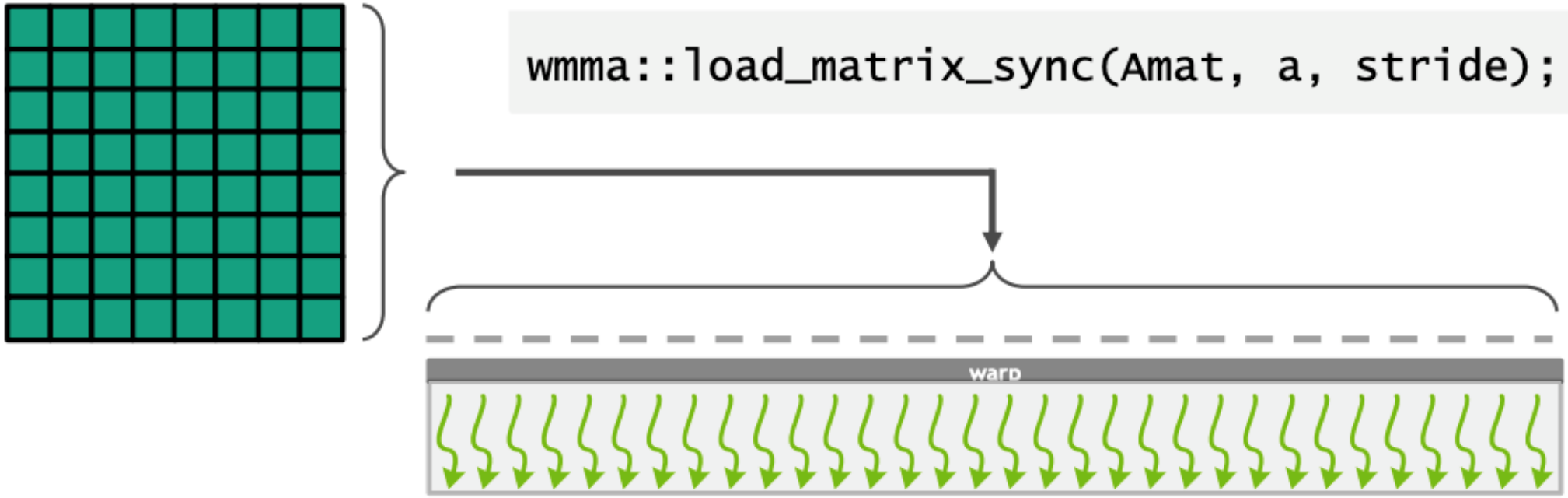


```
wmma::load_matrix_sync(Amat, a, stride);
```

# CUDA TENSOR CORE PROGRAMMING

## WMMA load and store operations

Warp-level operation to fetch components of matrices into fragments

```
wmma::store_matrix_sync(d, Dmat, stride);
```

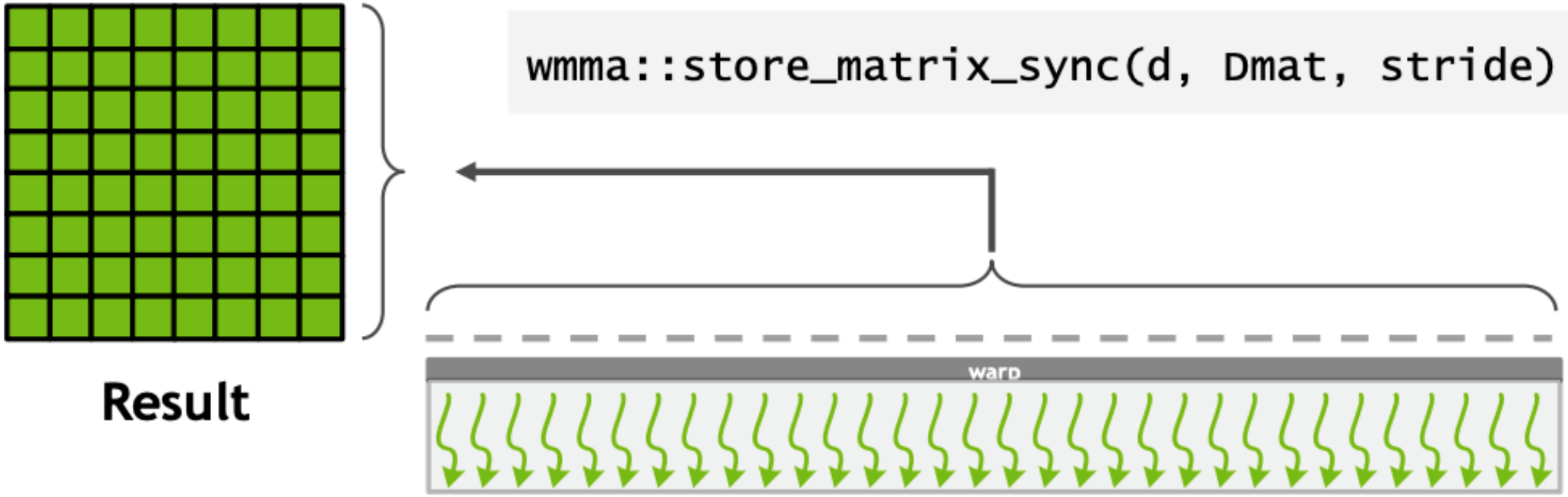

# TENSOR CORE EXAMPLE

Create Fragments

Initialize Fragments

Perform MatMul

Store Results

```
__device__ void tensor_op_16_16_16(
    float *d, half *a, half *b, float *c)
{
  wmma::fragment<matrix_a, …> Amat;
  wmma::fragment<matrix_b, …> Bmat;
  wmma::fragment<matrix_c, …> Cmat;

  wmma::load_matrix_sync(Amat, a, 16);
  wmma::load_matrix_sync(Bmat, b, 16);
  wmma::fill_fragment(Cmat, 0.0f);

  wmma::mma_sync(Cmat, Amat, Bmat, Cmat);

  wmma::store_matrix_sync(d, Cmat, 16,
                          wmma::row_major);
}
```

**CUDA C++**

**Warp-Level Matrix Operations**

Gains from

- Number Representation
  - FP32, FP16, Int8
  - (TF32, BF16)
  - ~16x
- Complex Instructions
  - DP4, HMMA, IMMA
  - ~12.5x
- Process
  - 28nm, 16nm, 7nm, 5nm
  - ~2.5x
- Sparsity
  - ~2x
- Model efficiency has also improved – overall gain > 1000x

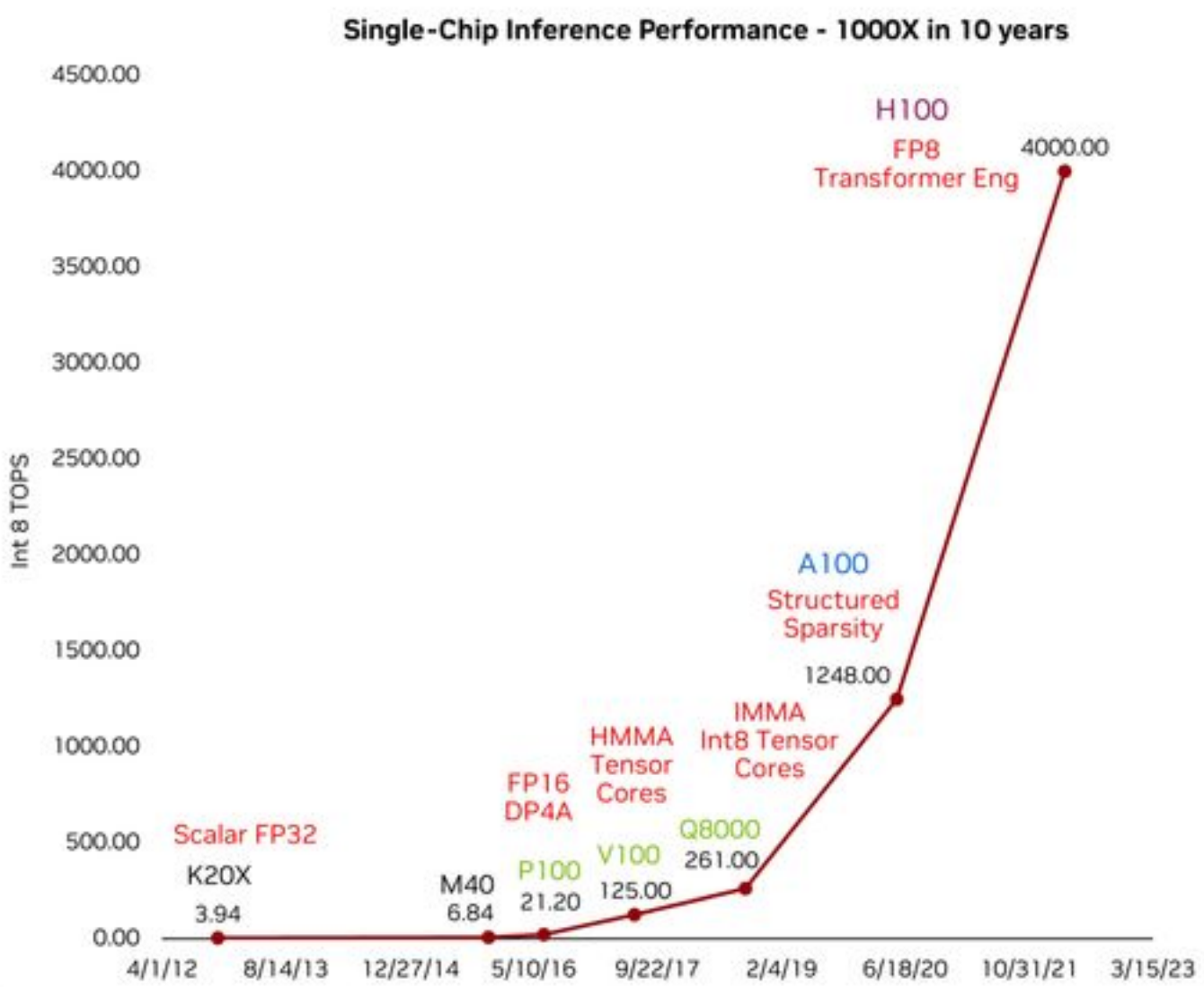


Bill Dally, Chief Scientist, Nvidia

# Google TPU (v1 in 2016)

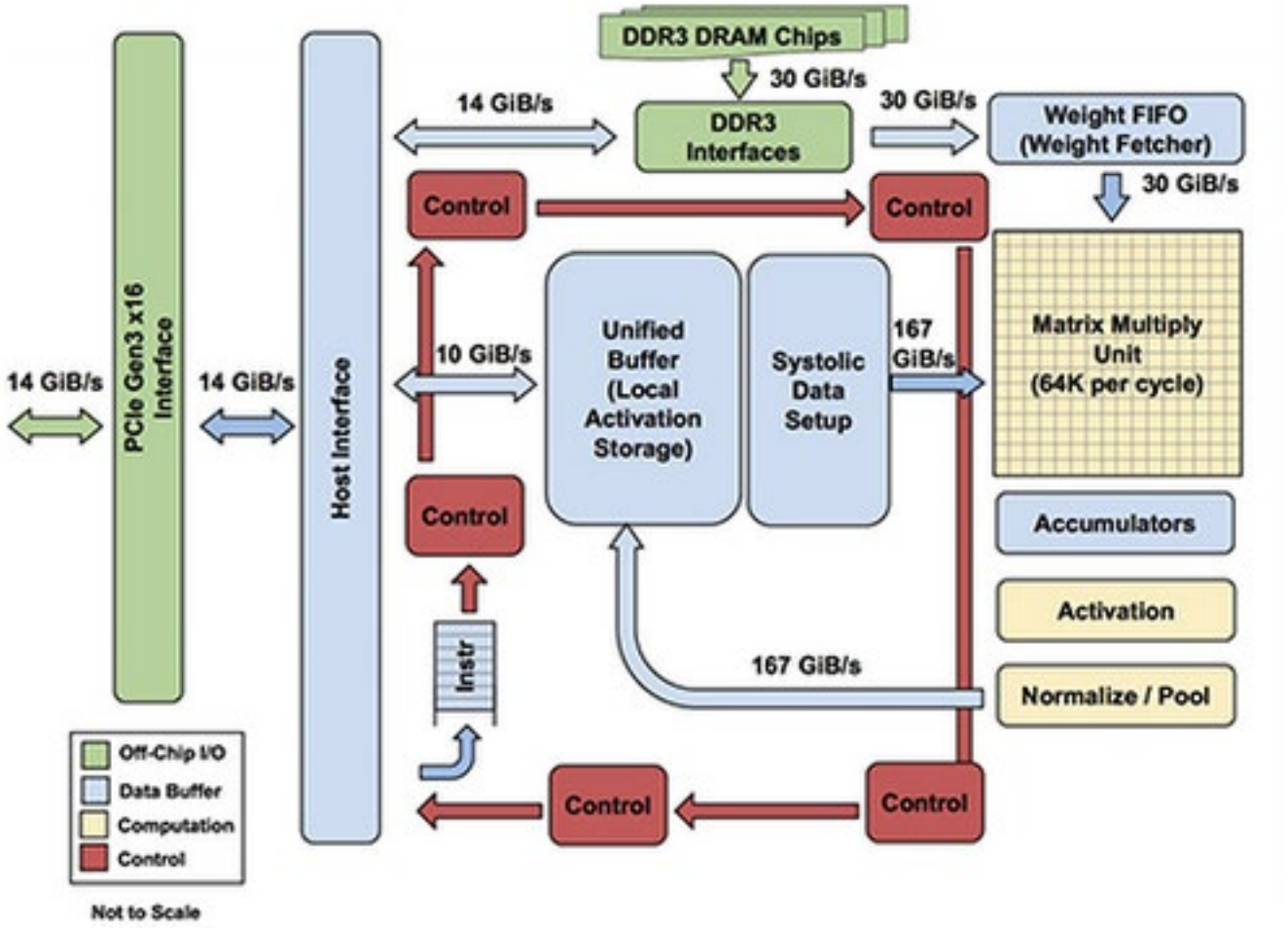


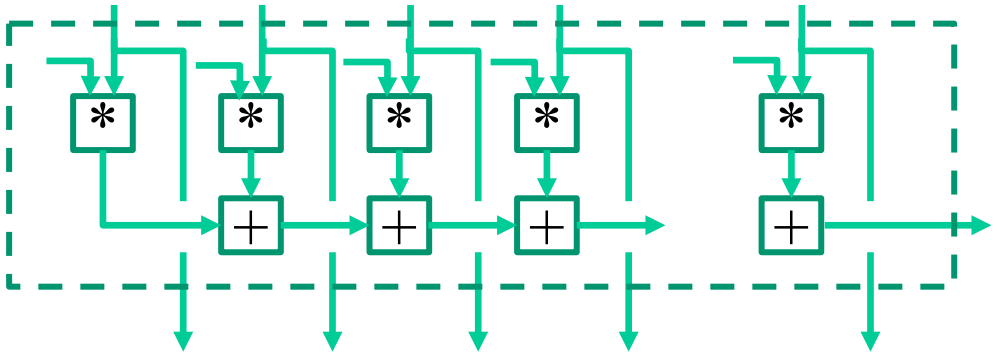

# Intel Advance Matrix Extensions (AMX)

- Introduced in 2020
- Introduced into x86 processors
- Usable directly from CPU code

```
// Load tile configuration
init_tile_config (&tile_data);

// Init src matrix buffers with data
init_buffer (src1, 2);
print_buffer(src1, rows, colsb);

init_buffer (src2, 2);
print_buffer(src2, rows, colsb);

// Init dst matrix buffers with data
init_buffer32 (res, 0);

// Load tile rows from memory
_tile_loadd (2, src1, STRIDE);
_tile_loadd (3, src2, STRIDE);
_tile_loadd (1, res, STRIDE);

// Compute dot-product of bytes in tiles with a
// source/destination accumulator
_tile_dpbssd (1, 2, 3);

// Store the tile data to memory
_tile_stored (1, res, STRIDE);
```

# ANY MORE QUESTIONS
# READ NVIDIA TECHNICAL BLOG &
# CUDA PG: WARP MATRIX FUNCTIONS